So, You Decided To Build an MBR?

Tips to help optimize process performance

Rion P. Merlo, John Bratby, John Holland, Henryk Melcer, Denny Parker, and Eric Wahlberg

Membrane bioreactors (MBRs) are a viable treatment alternative when a wastewater utility has footprint constraints, a market for reclaimed water, or needs to produce a high-quality effluent. Because MBRs can handle higher mixed liquor suspended solids (MLSS) concentrations and don't need secondary clarifiers, their footprint is much smaller than that of a conventional activated sludge process. MBRs can produce effluent with biochemical oxygen demand (BOD) and total suspended solids levels of 2 mg/L or less. They also can provide biological nutrient removal.

However, MBRs are not "off-the-shelf" units and require good process engineering to ensure cost-effective operations. Following are some issues to consider when designing an MBR plant.

© 2006 Water Environment & Technology All rights reserved

An 11-m^3/d (3-mgd) membrane bioreactor at the Randolph Park Water Reclamation Facility owned by the Pima County Wastewater Management Department (Tucson, Ariz.).

Pretreatment

Used membranes take up landfill space and are costly to replace, so prolonging membrane life is a key design consideration. A membrane's life span largely depends on the amount of pretreatment wastewater receives before entering an MBR. At the very least, wastewater should be sent through a 1- to 3-mm screen to remove stringy material and large debris that can clog or damage the membrane.

According to European researchers, finer screens collect more debris and minimize the cleaning requirements of downstream membranes, thereby extending membrane life. As a result, the membrane vendor may offer extended warranties. However, screening volume will increase, and the screenings will become more like primary sludge. The screenings also may have more BOD, so they may need better washing or odor control.

Because screening is a critical component of an MBR plant, design engineers should ensure that they've added enough redundancy to avoid the consequences of screen failure. Depending on the head available, two-stage screening may be appropriate. Another option is to screen the return activated sludge (RAS) line or direct RAS flow to the influent screen during low flows.

Membrane Cleaning Equipment

Cleaning strategies vary depending on the type of membrane used. Most MBR systems provide vigorous, coarse-bubble air scouring to prevent solids accumulation on the membrane surface. The other cleaning elements are chemicals — sodium hypochlorite solutions or mild acids (such as citric acid) — typically used to remove foulants that build up on the membrane surface. Design engineers need to include chemical storage tanks, metering pumps, and valves for these cleaning agents.

Primary Clarifiers

Although eliminating primary clarifiers simplifies the liquid treatment train, design engineers should consider including them in an MBR plant.

© 2006 Water Environment & Technology All rights reserved

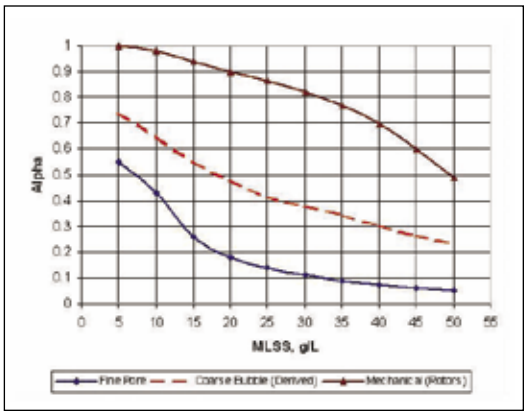

Increased MLSS concentrations in the MBR will result in reduced oxygen transfer efficiency. This graph shows the relationship of the oxygen transfer constant, alpha, to MLSS concentration.

Primary clarifiers reduce organic loading and can help offset the higher energy costs associated with MBRs. They remove BOD and total suspended solids less expensively, enabling the MBR to be smaller and use less oxygen. Also, if anaerobic digestion will be part of the solids treatment process, primary sludge will produce more biogas for energy recovery.

If primary clarifiers are used, conventional screens should be installed before them and fine screens should be installed after them (but before the MBRs).

Peak Flows

MBR capacity is limited by the amount of effluent that can pass through the membrane pores. The membrane flux — flow per unit area of membrane surface — is a function of many parameters, including membrane type, sludge filterability, liquid temperature, transmembrane pressure, and level of membrane fouling. Membranes typically are designed to handle peak flows ranging from 1.5 to 2.0 times the influent flow. If peak flows are much higher, the membrane warranty may be violated.

To avoid this problem, design engineers should consider adding flow equalization tanks or more membranes to handle higher flows. (The choice will depend on site-specific factors, such as available footprint, and excavation and construction costs.) Redundant membrane tanks enable a utility to manage peak flows through an MBR, control capital costs, and negotiate a favorable warranty. Alternatively, if the MBR is part of a plant upgrade, engineers could have the MBR handle the base load and the remaining flow can be treated by the existing biological treatment system. This will minimize the number of membranes (and related costs).

Design engineers also need to know the site-specific wastewater temperature patterns. Designing for peak flows without considering the wastewater temperature can be disastrous. At lower temperatures, mixed liquor becomes more viscous and more difficult to filter. If minimum temperatures correspond to peak flows, the peaking factor's effects will be exacerbated, and the peak flux rate will be even lower.

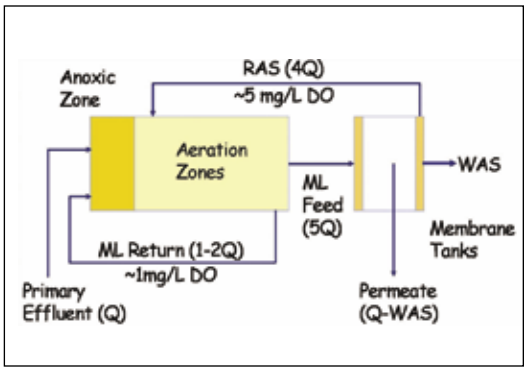

Nutrient removal in an MBR presents new challenges due to the high DO content in the recycle streams. One approach to managing high DO content in the RAS is to consider returning the RAS to the aeration tank and then taking a second return stream containing less oxygen to the anoxic selector.

Mixed Liquor Suspended Solids

MBRs can operate at much higher MLSS concentrations than conventional activated sludge systems because liquids and solids are separated by membranes, not gravity. An MBR's MLSS concentration typically is between 8000 and 15,000 mg/L, although some plants operate as high as 20,000 to 30,000 mg/L at times. MBR operators don't have to worry about solids inventory management and the effect of high solids loads on secondary clarifier performance. However, problems can arise when an MBR's MLSS concentration exceeds 10,000 mg/L.

Elevated MLSS concentrations can degrade membrane performance. Effective membrane operation is a matter of balancing the flow of solids to and from the membrane surface. Typically, coarse-bubble aeration moves solids away from the membrane faster than they approach it, so solids do not accumulate. As MLSS increases, however, solids may approach the membrane surface faster than they leave it, and more aeration may be needed to avoid solids accumulation. This increases energy costs.

Also, mixed liquor becomes more viscous as the MLSS concentration increases, making coarse-bubble aeration less effective. Eventually, operating pressures can exceed maximum conditions. Such fouling can be reversed by reducing the MLSS concentration, but the ability to "instantaneously" reduce solids inventory by increasing sludge wasting depends on the solids processing train involved.

MLSS also affects oxygen-transfer efficiency. As MLSS increases, α — the ratio of oxygen transfer in dirty water to clean water — drops. If MLSS is 10,000 mg/L, α is estimated to be 0.42. If MLSS is 15,000 mg/L, α is estimated to be 0.26. As α de-

© 2006 Water Environment & Technology All rights reserved

creases, more energy is needed to keep the MLSS sufficiently aerated, so energy costs increase.

Biological Nutrient Removal

To provide biological nutrient removal, both conventional activated sludge and MBR plants must include the following:

- For nitrogen removal, the solids retention time (SRT) must be long enough to promote the growth of nitrifying microorganisms and the plant must have an anoxic zone for denitrification.
- For phosphorus removal, the plant must have an anaerobic zone that selects for phosphorus-accumulating organisms.

An MBR's coarse-bubble aeration system may make nutrient removal challenging. The membrane is typically at the end of the process tank, where oxygen demand is the lowest. Together, the low oxygen demand and the coarse-bubble system may elevate dissolved oxygen (DO) concentrations, so the recycle stream that returns mixed liquor from the end of the reactor to the anoxic or anaerobic zones will contain too much DO and make these zones ineffective.

When designing an MBR system for nutrient removal, design engineers should carefully evaluate the oxygen recycle and counter the effects by creating larger anoxic or anaerobic zones, recycling from the aerobic zone rather than the membrane tank, or recycling to a pre-anoxic tank to deplete DO before introducing influent.

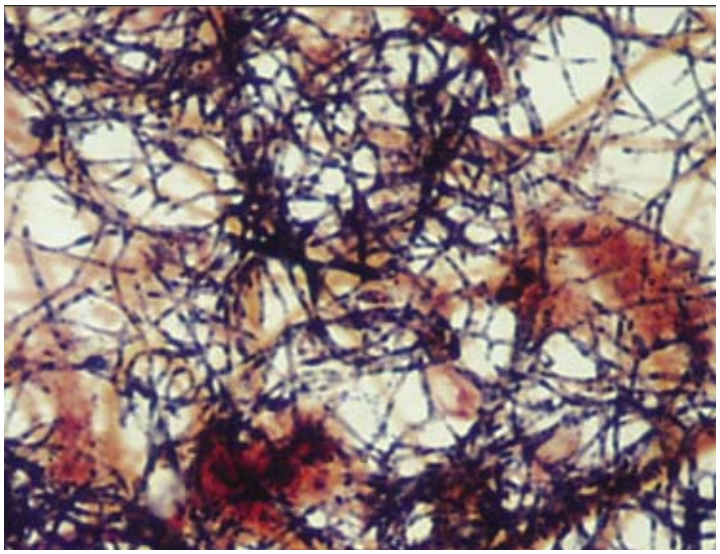

The MBR is a "trapping" environment that may be susceptible to biological foaming attributed to Nocardioform bacteria, pictured here, or *Microthrix parvicella*.

Sludge Retention Time

Although MBRs can function over a wide range of SRTs, operating at SRTs of less than 3 days results in rapid membrane fouling because

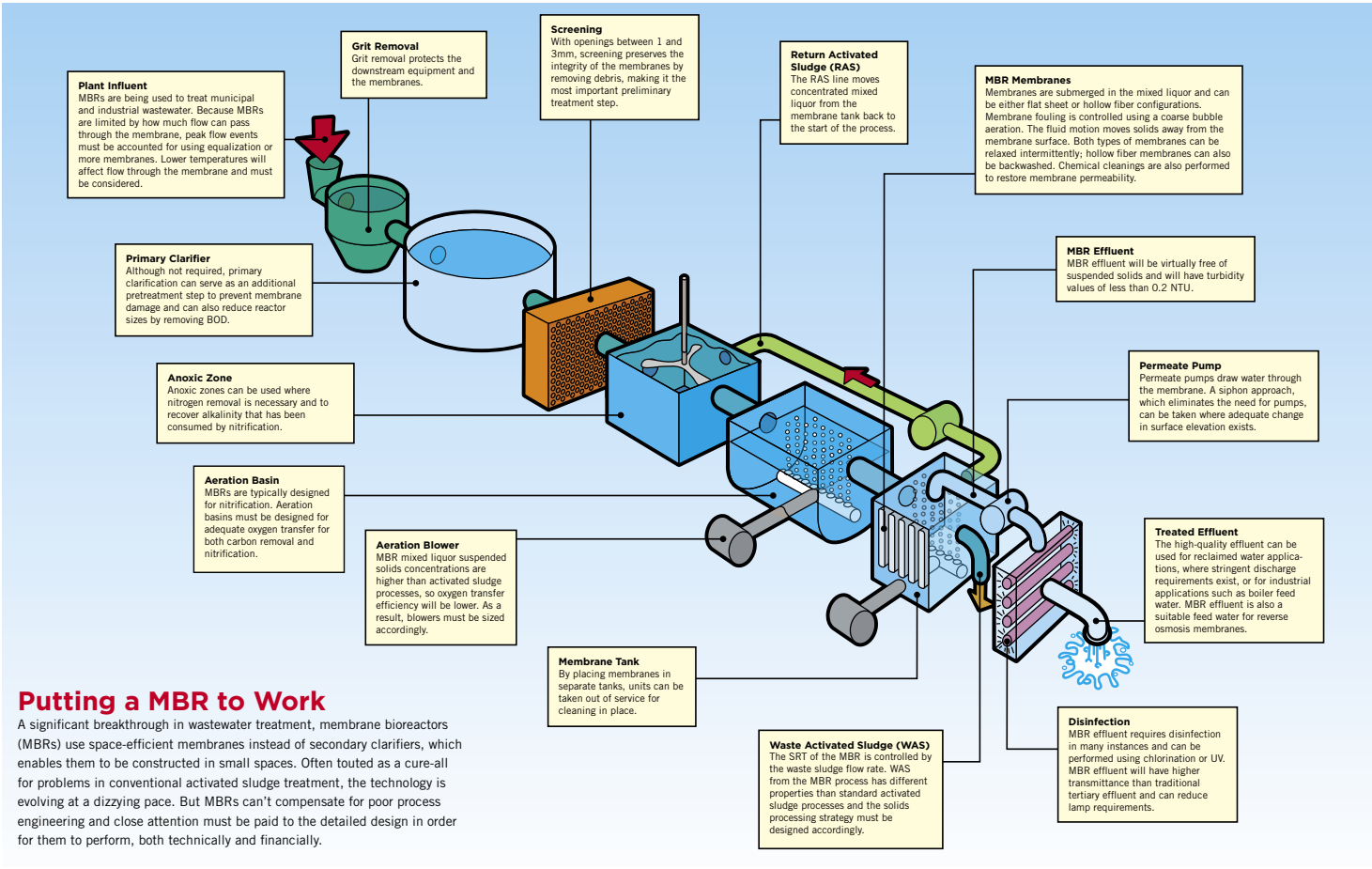

Putting a MBR to Work

A significant breakthrough in wastewater treatment, membrane bioreactors (MBRs) use space-efficient membranes instead of secondary clarifiers, which enables them to be constructed in small spaces. Often touted as a cure-all for problems in conventional activated sludge treatment, the technology is evolving at a dizzying pace. But MBRs can't compensate for poor process engineering and close attention must be paid to the detailed design in order for them to perform, both technically and financially.

© 2006 Water Environment & Technology All rights reserved

It is possible to control nuisance foaming in MBRs by wasting through a classifying selector, a technology pioneered on conventional activated sludge systems. This photo shows the classifying selector in operation at Randolph Park.

of organic foulants, according to research performed at the University of California–Berkeley. Typically, MBR SRTs are 8 days or longer to promote nitrification (this is often a membrane manufacturer's requirement).

When selecting an appropriate SRT, design engineers should consider its effects. The following principles apply to both conventional activated sludge and MBR systems:

- A higher SRT means a higher solids inventory, so a larger reactor will be needed to maintain the design MLSS condition (thereby increasing project costs).
- A higher SRT reduces sludge production, so the solids processing system may be smaller, but the MBR will need more oxygen to fuel endogenous respiration.

Foam

Because MBRs need lots of air to function properly and only allow sludge to exit the system as waste sludge, they are susceptible to biological foaming microorganisms, such as Nocardioform or *Microthrix parvicella*. An improperly designed MBR may have excessive foaming, which could cause minor inconveniences or process failure.

In some conventional activated sludge plants, reduced SRT and anaerobic selectors are used to control foaming. This is not an option for MBRs, which typically are designed to operate at longer SRTs. Other conventional plants use chemicals, such as polymer, to control foam. Although not reported in MBRs to date, polymer addition may cause membrane fouling.

To minimize foaming in MBRs, design engineers should consider continuous foam removal via surface wasting or a classifying selector. Chlorination of RAS or a chlorinated surface spray also can be feasible control options.

Solids Treatment

Sludge produced by MBRs has different thickening and dewatering properties than conventional activated sludge, according to research performed at the University of California–Berkeley. MBR sludge is generated via filtration, while conventional activated sludge is generated via sedimentation. So, the resulting sludges may have different properties and react differently to solids treatment processes.

At present, many unknowns exist in processing MBR sludge. With this in mind, design engineers should not assume that a gravity thickener, for example, will thicken MBR sludge. They would do better to perform bench-scale testing of thickening and dewatering schemes before finalizing an MBR plant design.

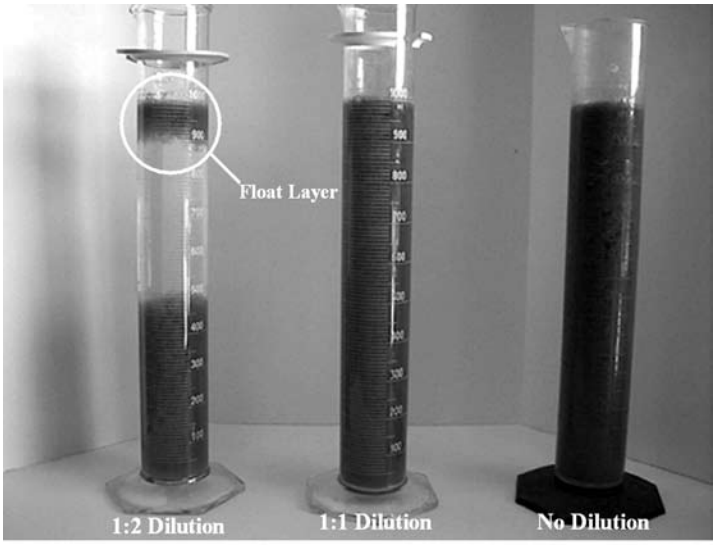

Since MBR sludge differs from conventional activated sludge, there are design challenges associated with selecting an appropriate solids processing strategy. This photo shows batch settling tests performed on MBR sludge after 30 min. of settling. Undiluted MBR sludge (approximately 8000 mg/L) and 1:1 diluted sludge did not settle. The 1:2 dilution did settle; however, there was still a significant amount of sludge remaining at the top of the column after 30 min.

***Rion P. Merlo**, Ph.D., P.E., is a senior engineer at Brown and Caldwell (Walnut Creek, Calif.). **John Bratby**, Ph.D., P.E., is a regional process engineer in the firm's Denver office, and **Henryk Melcer**, Ph.D., P.E., is a regional process engineer in the firm's Seattle office. **John Holland**, P.E., is a supervising engineer in the firm's Tucson, Ariz., office. **Denny Parker**, Ph.D., P.E., is director of technology based in the firm's Walnut Creek office. **Eric Wahlberg**, Ph.D., P.E., is wastewater practice leader based in the firm's Irvine, Calif., office.*

© 2006 Water Environment & Technology All rights reserved